Q84.4194.100.002F

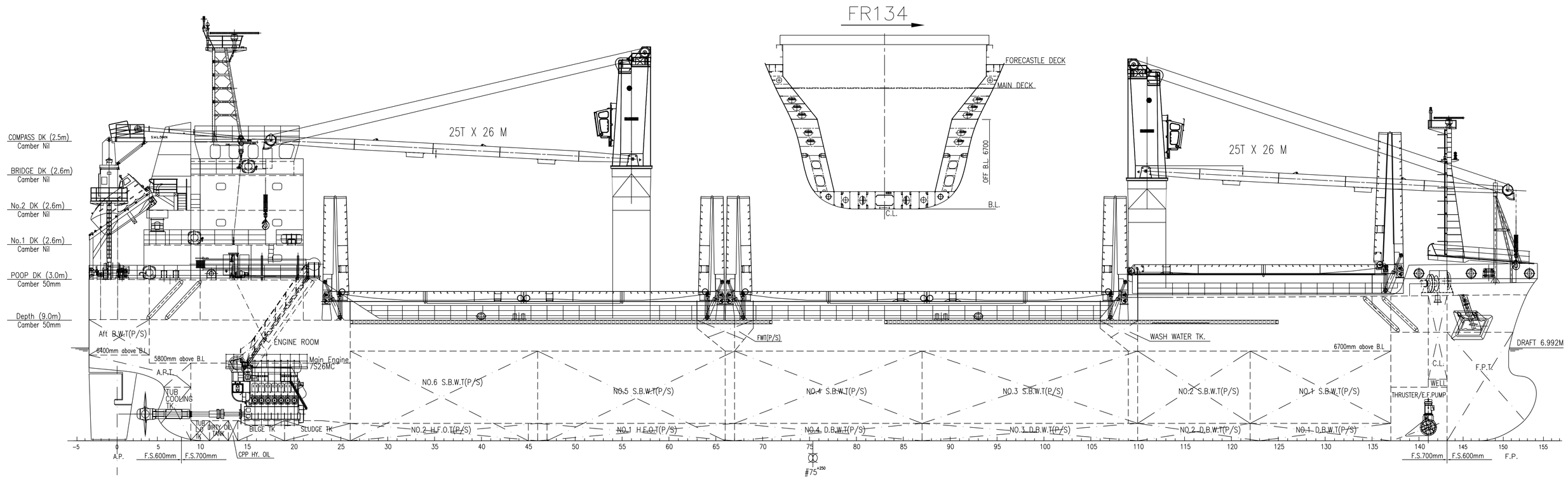

MAIN DIMENSIONS

LENGTH OVER ALL	~108.20m
LENGTH BETWEEN PERPENDICULARS	103.90m
BREADTH MOULDED	18.20m
DEPTH MOULDED	9.00m
DRAUGHT DESIGN	5.50m
DRAUGHT SCANTL.	6.992m
MAIN ENGINE	MAN B&W 7S26MC 1set
SERVICE SPEED	12.4 Knots
at designed droft with 90%MCR	
COMPLEMENT	14P

COMPASS DECK

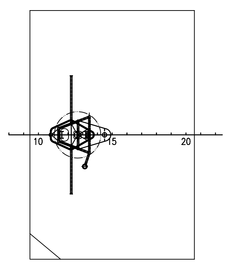

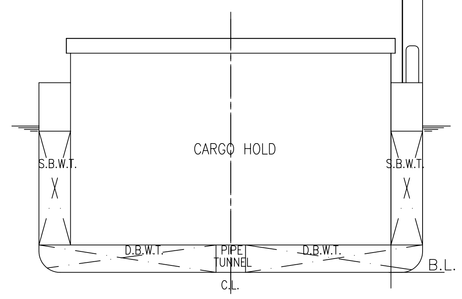

BRIDGE DECK

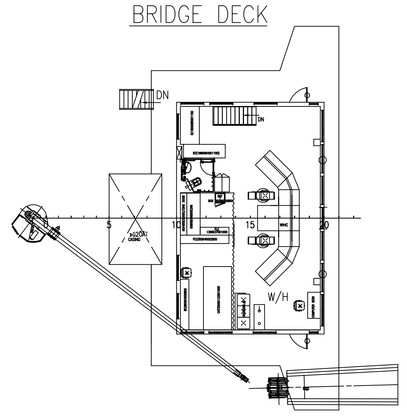

NO.2 DECK

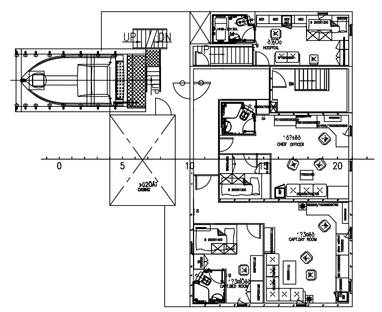

MAIN DECK

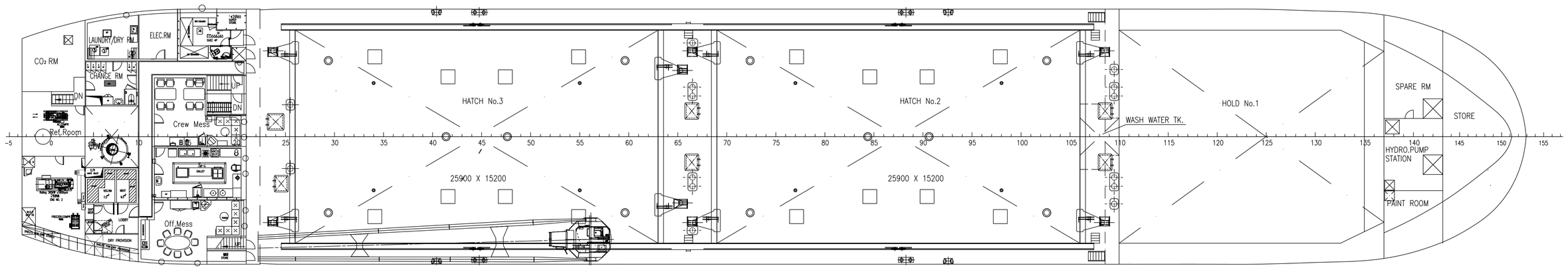

POOP DECK

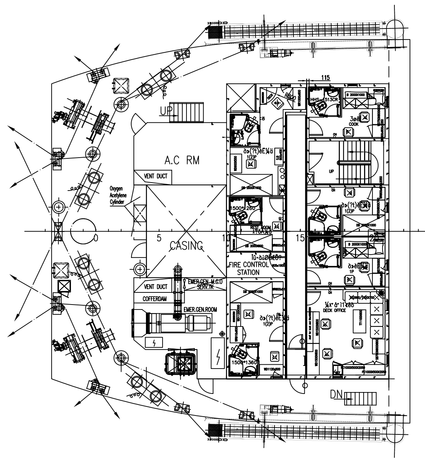

NO.1 DECK

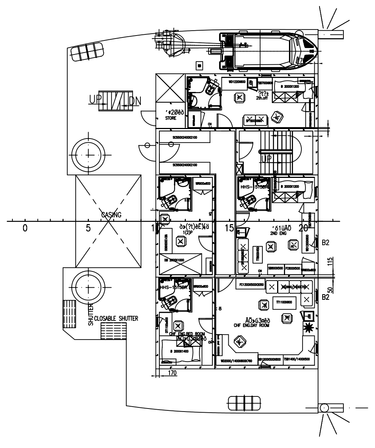

IN HOLDS

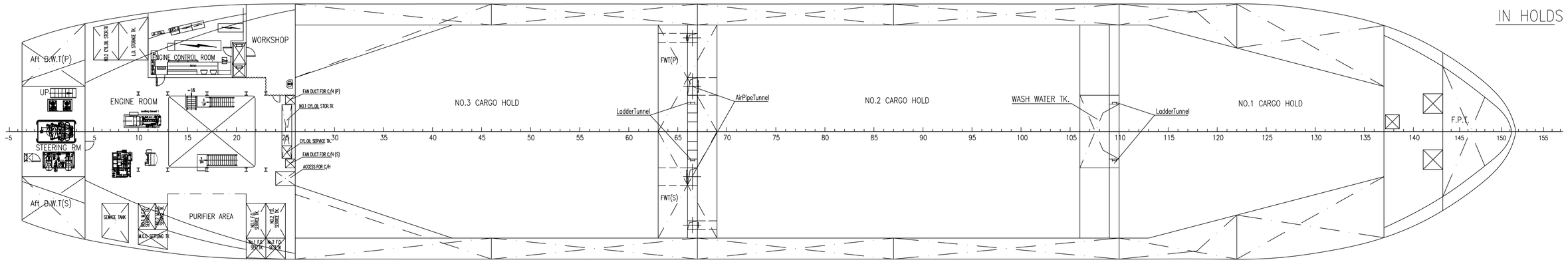

FORECASTLE DECK

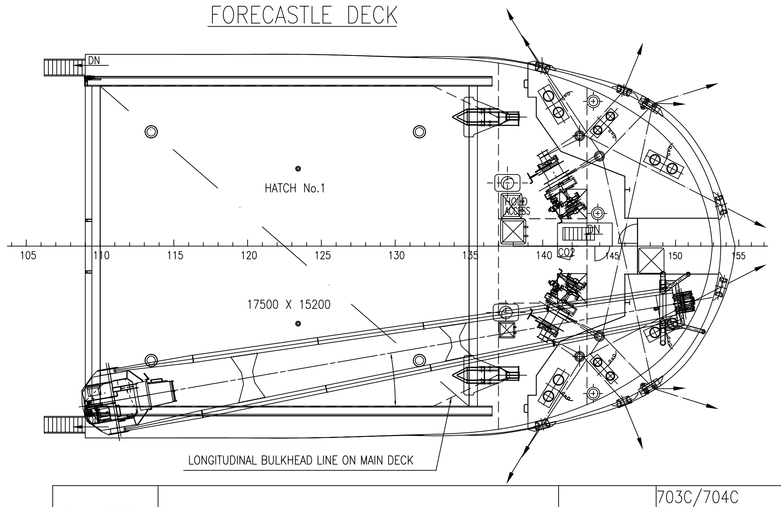

TANK TOP

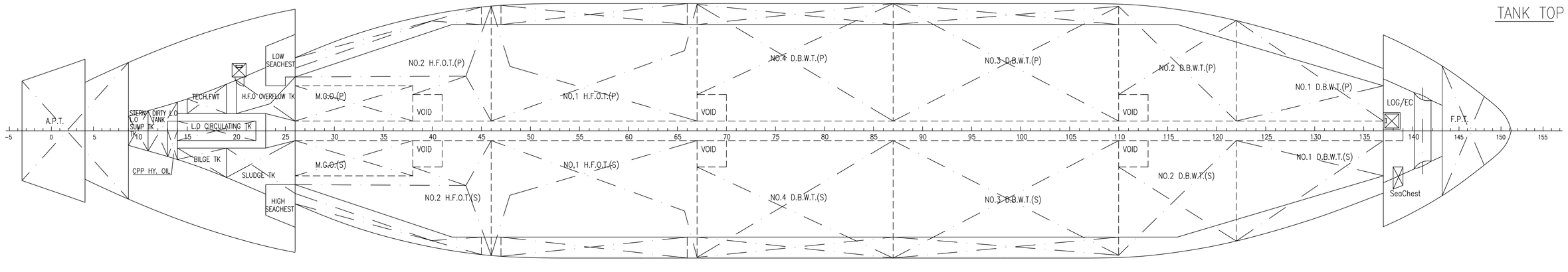

BUILDER	YANGZIJIANG SHIPYARD								HULL'S NO.	703C/704C 701C/702C	
DESIGNER	MARINE DESIGN & RESEARCH INSTITUTE OF CHINA										
								7600DWT MP-DRY CARGO SHIP			
电气		标记	数量	修改单号		签字	日期	GENERAL ARRANGEMENT	Q84.4194.100.002F		
舾装		设计							标记	质量 kg	比例
轮机		制图									1:200
设备		校对									
结构		审核							共 1 页	第 1 页	
专业	签名	标准化							MARIC		
会签		审定									

面积:0.50m²